浙江安欣电业有限公司

ANXIN ZHE JIANG ANXIN ELECTRONIC CO.,LTD.

Product Name	12.19.009 Fixed frequency wining harness	Rev	A
Part Number	XS-YSJ-001	Date	2019-7-26
Conn Type	11.66mm WTB CONN	Page	1/7

Product Specification

Prepared by: Zhang Ting

Date: 2019-7-26

Checked by: Yang Qi Jia

Date: 2019-7-26

Approved by: Huan An

Dote: 2019-7-26

ZHEJIANG ANXIN ELECTRONICS CO.,LTD 浙江安欣电业有限公司 技术部

Product Name	12.19.009 Fixed frequency wining harness	Rev	A
Part Number	XS-YSJ-001	Date	2019-7-26
Conn Type	11.66mm WTB CONN	Page	2/7

Revision History

Rev	Revision Desciption	Approved	Date
A			
B			
C			
D			
E			

Product Name	12.19.009 Fixed frequency wining harness	Rev	A
Part Number	XS-YSJ-001	Date	2019-7-26
Conn Type	11.66mm WTB CONN	Page	3/7

1.SCOPE:(适用范围)

This specification covers production and inspection of Model Fixed frequency wining harness 12.19.033 connector

本规范内容适用于本公司定频线束12.19.033型条型连接器产品的生产与检验.

2.Product Classification:(产品分类)

poles:3。

接触件数目：3。

3.USE CONDITION:(使用条件)

3.1 Ambient temperature Range(环境温度)：-25° C～+85° C

3.2 Applicadle Wire Sizes(适用线规)：AWG# 18

4.Appearance and Dimension:(外观及尺寸)

4.1 Appearance(外观)：Piastic part:smooth and fiat surface without discolor,broken,cark,distortion defects is acceptable;Metal part:bright and even surface without rust, oxide,fog and obvious physical damage defects is acceptable; Wire:Clearing surface without discolor,broken defects is acceptable;The contact crimp,identification,other component shall be checked against the relevant specification。

塑料件表面应无明显疤痕、凹陷、开裂及影响使用的变形；金属件表面无锈蚀、氧化、无明显的机械损伤等缺陷；导线表面清洁，无破损等缺陷；标志、其它零件外观符合相应规范。

4.2 Dimension(外形尺寸)：According to drawings.依照附图所示

4.3 Exchangable(互换性):Exchabgable with same specification products

相同规格应能互换。

5.Material:(材料)

P/N (零件名称)	Type (类型)	Material (材料)	Finish (表面处理)	Explain (说明)
Terminal	Contact (插簧)	Phosphor bronze (锡青铜厚0.4mm)	Tin Plated.3-4um	ROHS Compliant
Housing (孔座)	Plastic (塑壳)	PBT plastic	Color:White (颜色：白色)	
Wire (导线)	Litz wire (编织线)	Polyester Yam (涤纶丝)	Color:White、Black in white、Red in white (颜色：白色、黑夹白、红夹白)	
Bushing (套管)	Litz bushing (编织套管)	Polyester Yam (涤纶丝)	Color:Black in White (颜色：白夹黑色)	

6.Electriacl Performance:(电气性能)

NO.(序号)	Item(项目)	Requirement(技术要求)
6.1	Voltage Rated(额定电压)	380V AC.DC.
6.2	Current Rated(额定电流)	15A AC.DC.
6.3	Contact Resistance(接触电阻)	≤ 40 MΩ
6.4	Contact Resistance(绝缘电阻)	≥1000 MΩ
6.5	Dielectric Strength(耐压)	≥ 3000V AC/minute

7.Mechanical Performance:(机械性能)

NO.(序号)	Item(项目)	Requirement(技术要求)
7.1	Terminal and conductor pressure (端子与导线压着力)	≥90N (per pin)

7.2	Female contac Retention force (端子固定力)	≥30N (per pin)
7.3	3-hole cutting force (3孔插入力)	≤135N (per pin)
7.4	Single hole pull force(5 after cutting) 单孔拨出力（5插后）	≥9N (per pin)

8.Endurance Charcteristics:(环境性能)

NO. (序号)	Item(项目)	Requirement(技术要求)
8.1	Heat test (耐热性)	Time(时间)：96h; Temperature(温度)：+85±3℃; Appearature(外观)：No DAMAGE(无损伤) Contact resistance(接触电阻)：≤40MΩ
8.2	Cold test (耐冷性)	Time(时间)：48h; Temperature(温度)：-25±3℃; Appearature(外观)：No DAMAGE(无损伤) Contact resistance(接触电阻)：≤40MΩ

Product Name	12.19.009 Fixed frequency wining harness	Rev	A
Part Number	XS-YSJ-001	Date	2019-7-26
Conn Type	11.66mm WTB CONN	Page	6/7

8.3	Temperature Cycling (温度循环)	Low temperature(低温）：-15±3℃; High temperature(高温）：+85±3℃; For 5 cycles.test after keeping in Normal condition for 30 min。 5次循环后，放置在正常环境中30分钟，再进行测试. Appearature(外观）：No DAMAGE(无损伤） Contact resistance(接触电阻）：≤40MΩ
8.4	Invariablenes humidity (恒定湿热)	Temperature(温度）：60±2℃; Relative humidity(相对湿度）：90～96% RH; Time(时间）：96h Appearature(外观）：No DAMAGE(无损伤） Contact resistance(接触电阻）：≤40MΩ Insulation Resistance(绝缘电阻）：≥1000MΩ
8.5	Salt Spray (盐雾试验)	Salt concentration(浓度）：5±1%; Temperature(温度）：35±2℃; Testing time(时间）：24±2h After salt is removed by running wafer and a drop is removed,it is measured 把试验样品从试验箱顶悬挂下来，采用浓度为(5±1)%的氯化钠溶液，连续雾化24h，试验后用流动的蒸馏水轻轻洗去表面沉积物，在常温驻湿条件下恢复1～2h，外观无损伤.

Product Name	12.19.009 Fixed frequency wining harness	Rev	A
Part Number	XS-YSJ-001	Date	2019-7-26
Conn Type	11.66mm WTB CONN	Page	7/7

9.Packaging Transportation Storage:(包装、运输、贮存)

9.1 Packaging(包装)

(1) The inner package of wire hamess is plastic bag,200 harnesses per bag。marked with product name,specification model,quantity date in produced。
线束内包装为塑料包装袋，每袋装线束200条。装（贴）入合格证，注明产品名称、规格型号、数量、生产日期。

(2) Extemal packing is carton,facing the packing list,print QR code ,shipment box times,name of material,manufacturer,date of manufacture,batch number,quantity delivered。
外包装为纸箱，贴装箱单，装箱单打有二维码，出货箱次，物料名称，制造商，生产日期，生产批号，出货数量。

(3) The product in the box must not rock.
产品在箱内不晃动。

9.2 Transportation(运输)

Allow for any way transportation,can’t get wet and mechanical injury.
允许用任何方式运输，勿淋湿及机械性损伤。

9.3 Storage(贮存)

The connector of packing finished should be in the amdient temperature between -10℃ to +40℃,relative humidity ≤80%, To store in store in storehouse does not have acidic, alkaline air and other corrosive gas in the amdient air.
包装完毕的连接器应在环境温度为-10℃～+40℃,相对湿度≤80%,周围空气中没有酸性、碱性及其它腐蚀性气体的库房中贮存。

ROHS

REV	REVISION DESCRIPTION	DATE	APPD

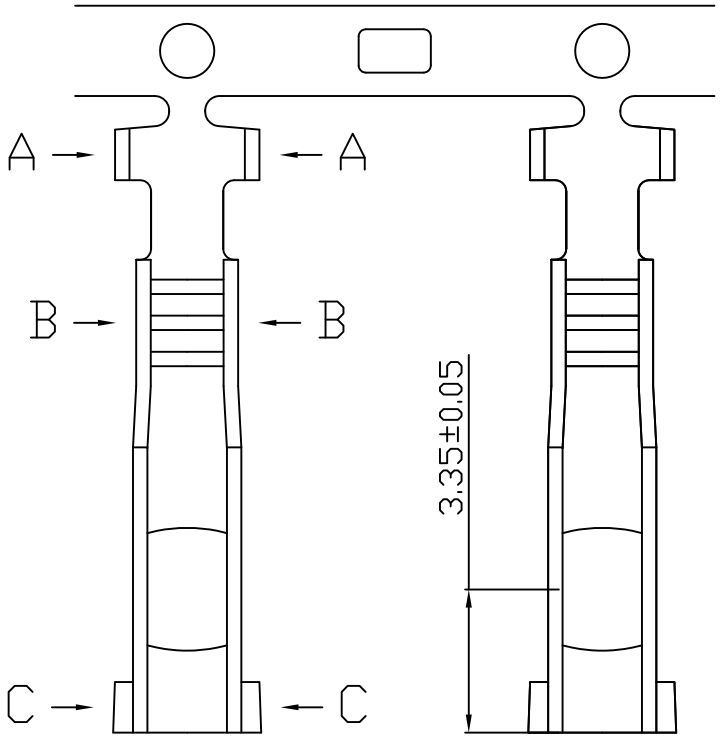

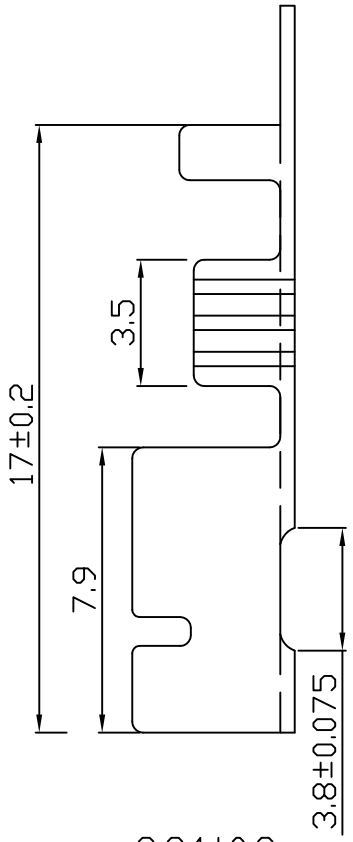

NOTES

Accepts :AWG17-20# Wire
Range0.33～0.83mm²
Material:Phosphor Bronze
Finish: 3-4um Tin plated
Qty/Reel:3500PCS
Thickness:0.4mm

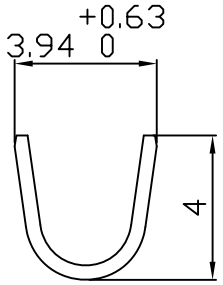

A-A

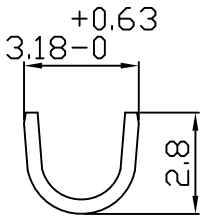

B-B

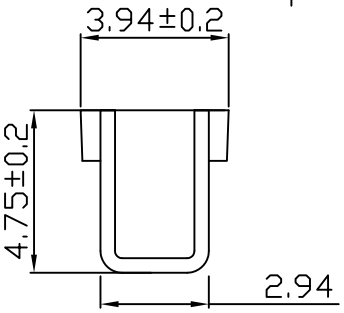

C-C

GENERAL TOLERANCES (UNLESS SPECIFIED)		ANXIN 浙江安欣电业有限公司 ZHEJIANG ANXIN ELECTRONICS CO.,LTD.		
.x: ±0.25	x° : ±3.0°	PRODUCT NAME: 引线压接端子		TITLE: ****mm pitch WTB Connector Housing
.xx: ±0.15	xx° : ±2.0°			
.xxx: ±0.01	xxx° :±1.0°	APPD: Zhang Qin	DATE:19.07.26	PART.NO:
finish:		CHKD:Yang Qi Jia	DATE:19.07.26	SCALE:N/A / PAGE:1/1
DRAWING NO:		DR: Huang An	DATE:19.07.26	UNITS:mm / REV:A

ROHS

REV	REVISION DESCRIPTION	DATE	APPD

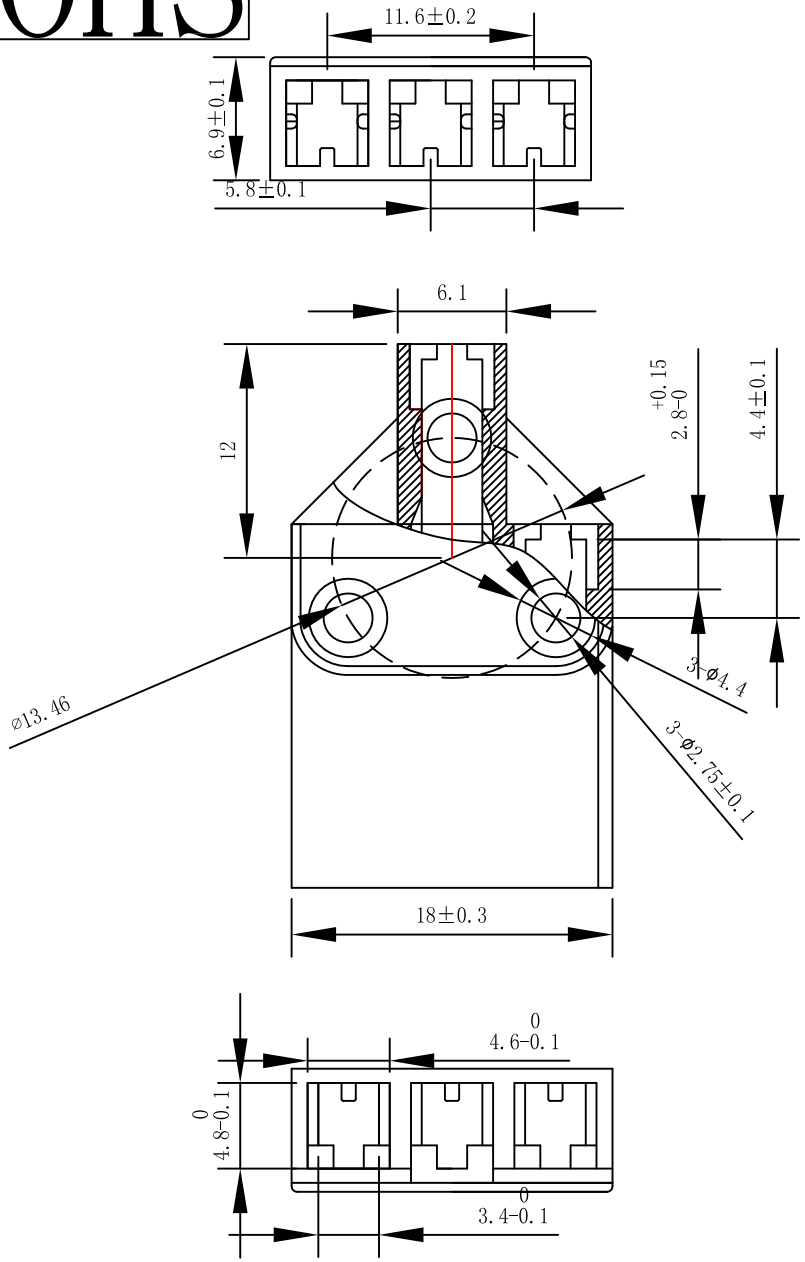

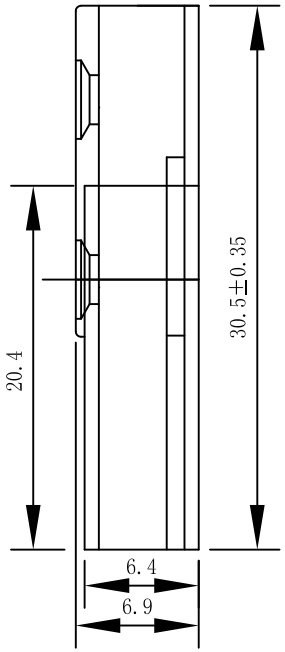

NOTES

Material:PBT plastic

ADielectric Strength:

⩾ 3000V AC/minute

Contact Resistance:

⩾1000 MΩ

Hole spacing: 11.66mm

Heat test: Time:96h;

Temperature:+85±3℃;

Appearature:No DAMAGE

Cold test: Time:48h;

Temperature:-25±3℃;

Appearature:No DAMAGE

GENERAL TOLERANCES (UNLESS SPECIFIED)		ANXIN 浙江安欣电业有限公司 ZHEJIANG ANXIN ELECTRONICS CO.,LTD.		
.x: ±0.25	x° : ±3.0°	PRODUCT NAME: 接线盒		TITLE: 11.66mm pitch WTB Connector Housing
.xx: ±0.15	xx° : ±2.0°			
.xxx: ±0.01	xxx° :±1.0°	APPD: Zhang Qin	DATE:19.07.26	PART.NO:
finish:		CHKD:Yang Qi Jia	DATE:19.07.26	SCALE:N/A PAGE:1/1
DRAWING NO:		DR: Huang An	DATE:19.07.26	UNITS:mm REV:A

REV	REVISION DESCRIPTION	DATE	APPD

ROHS

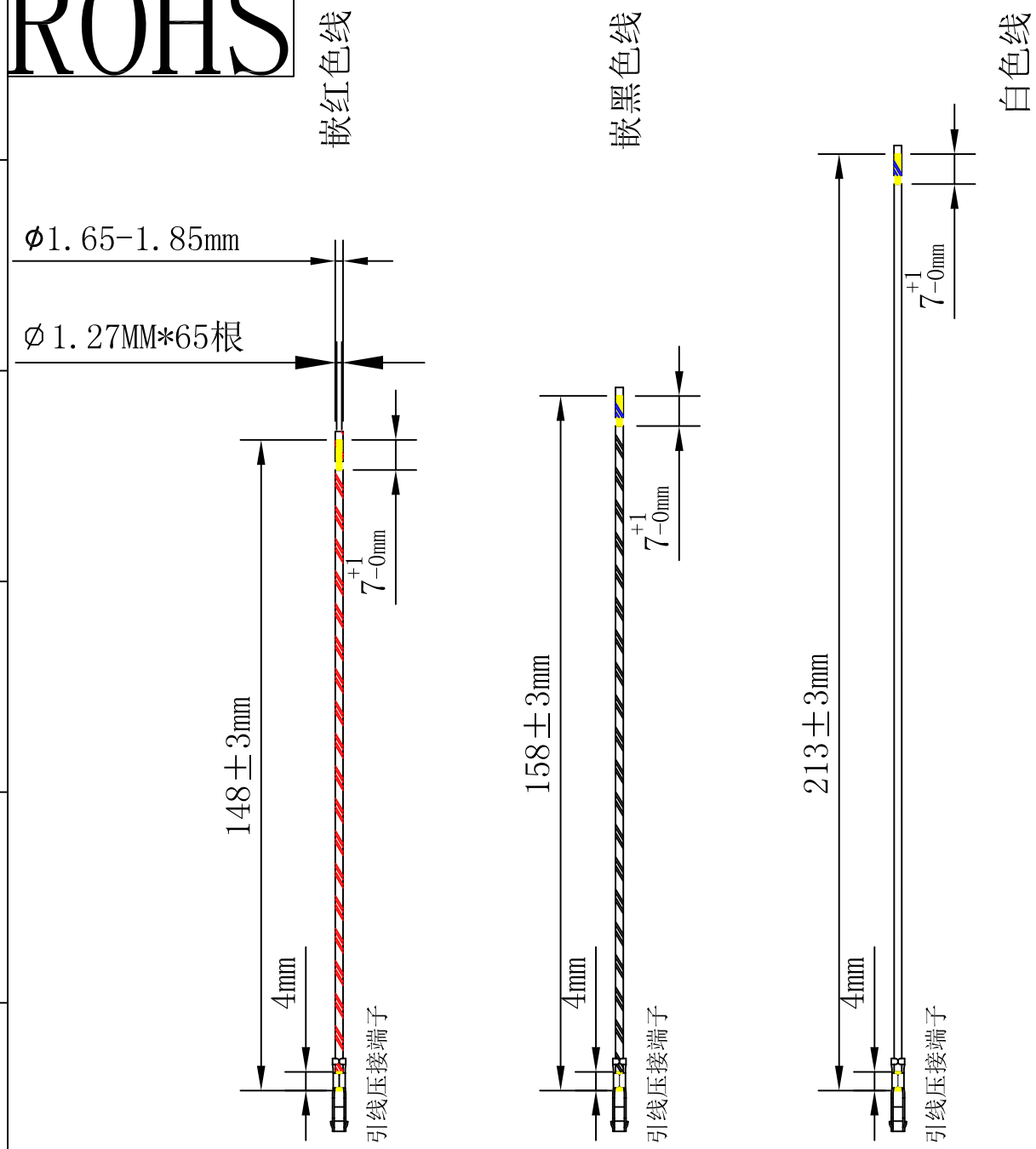

NOTES

Voltage Rated: 380V AC.DC.
Current Rated: 15A AC.DC.
ADielectric Strength:
⩾ 3000V AC/minute
Contact Resistance:⩽ 40 MΩ
Core material:Phosphorus copper
Wire core specification:
Φ1.27mm*65 root
Inner layer material:Polyester
Diaphragm material:PBT thin films
(0.018*17.2mm)
Outer material: Polyester
Terminal and conductor pressure:
⩾90N (per pin)

GENERAL TOLERANCES (UNLESS SPECIFIED)		ANXIN 浙江安欣电业有限公司 ZHEJIANG ANXIN ELECTRONICS CO.,LTD.		
.x: ±0.25	x° : ±3.0°	PRODUCT NAME: 端子压着线		TITLE: ****mm pitch WTB Connector Housing
.xx: ±0.15	xx° : ±2.0°			
.xxx: ±0.01	xxx° :±1.0°	APPD: Zhang Qin	DATE:19.07.26	PART.NO: 12.19.009
finish:		CHKD:Yang Qi Jia	DATE:19.07.26	SCALE:N/A / PAGE:1/1
DRAWING NO:		DR: Huang An	DATE:19.07.26	UNITS:mm / REV:A

ROHS

REV	REVISION DESCRIPTION	DATE	APPD

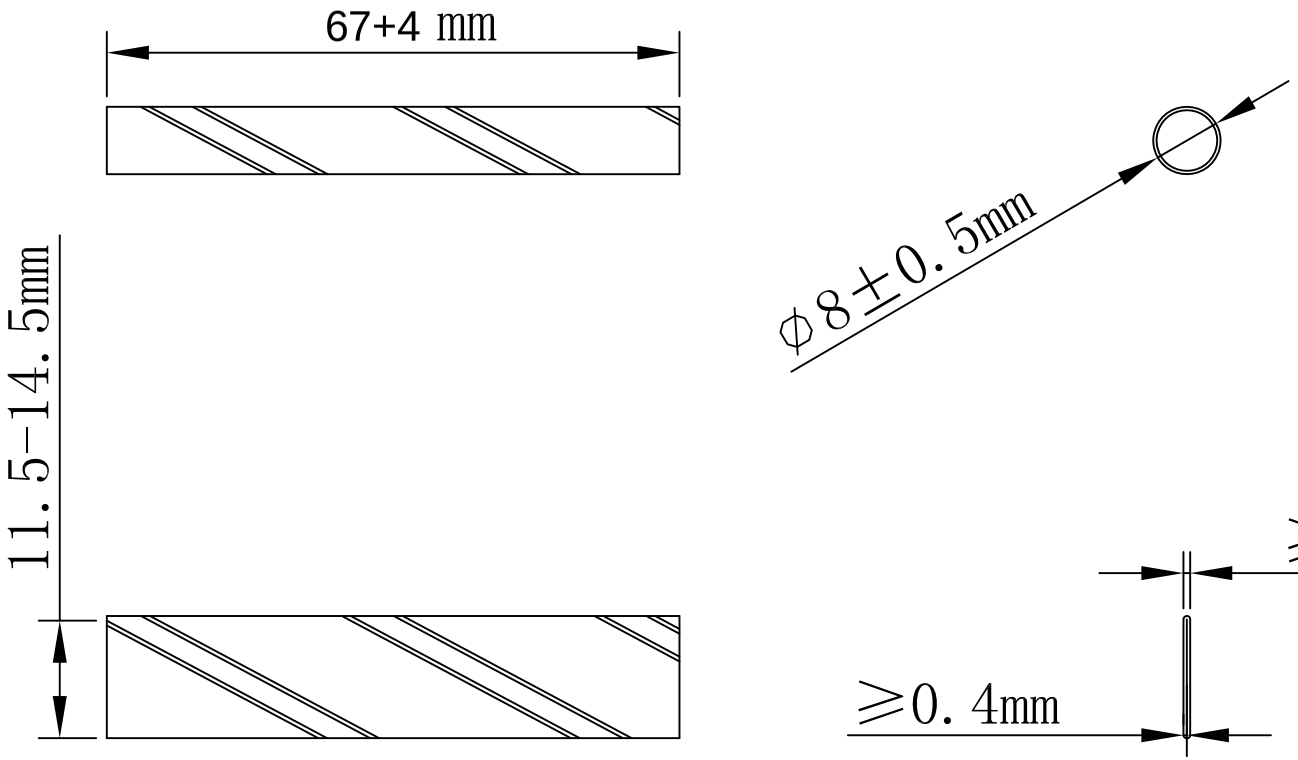

压扁后示图

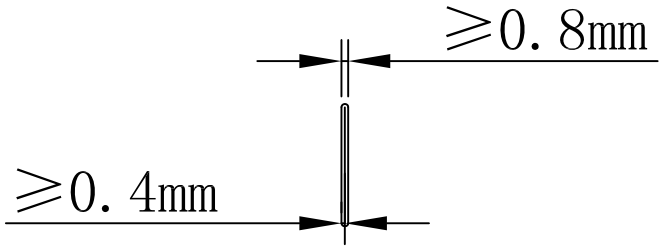

NOTES

ADielectric Strength:
≥ 3000V AC/minute
Contact Resistance: ≥1000 MΩ
Material quality: Polyester
Material specification:
278dtex*72F

GENERAL TOLERANCES (UNLESS SPECIFIED)		ANXIN 浙江安欣电业有限公司 ZHEJIANG ANXIN ELECTRONICS CO.,LTD.			
.x: ±0.25	x° : ±3.0°	PRODUCT NAME: 套 管		TITLE: ****mm pitch WTB Connector Housing	
.xx: ±0.15	xx° : ±2.0°				
.xxx: ±0.01	xxx° :±1.0°	APPD: Zhang Qin	DATE: 2020.9.18	PART.NO: 12.19.009	
finish:		CHKD:Yang Qi Jia	DATE: 2020.9.18	SCALE:N/A	PAGE:1/1
DRAWING NO:		DR: Huang An	DATE: 2020.9.18	UNITS:mm	REV:A

ROHS

REV	REVISION DESCRIPTION	DATE	APPD

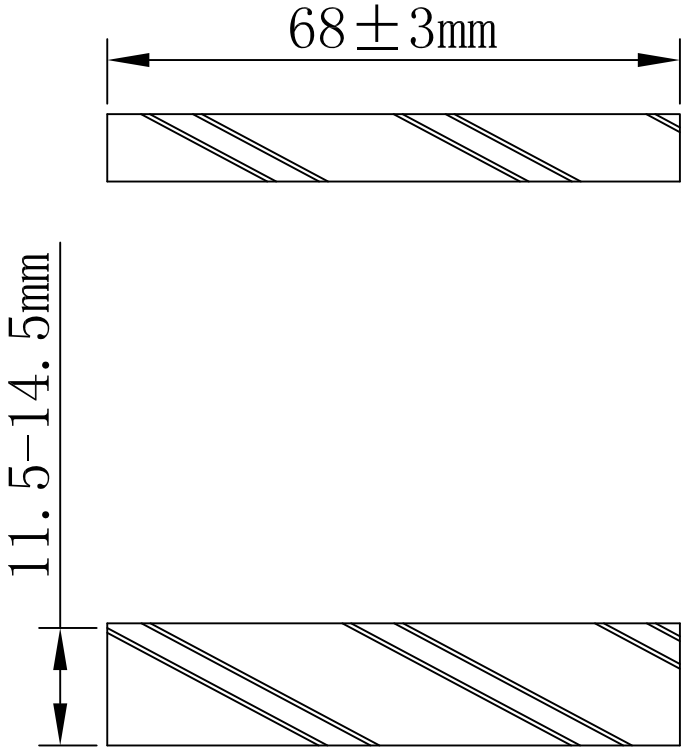

压扁后示图

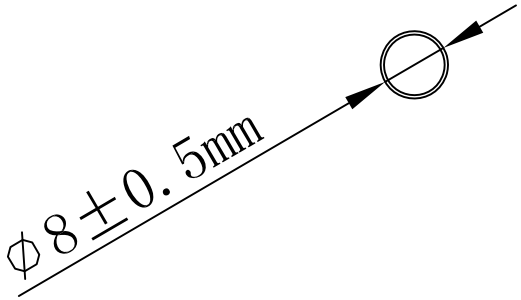

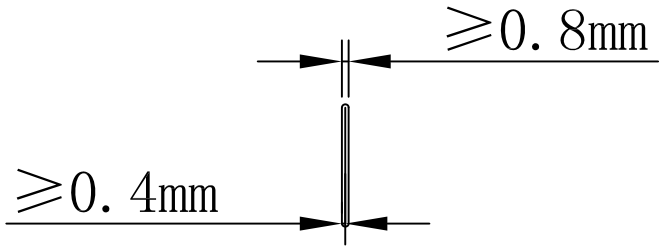

NOTES

ADielectric Strength:
≥ 3000V AC/minute
Contact Resistance: ≥1000 MΩ
Material quality: Polyester
Material specification:
278dtex*72F

于2020年9月18日作废

GENERAL TOLERANCES (UNLESS SPECIFIED)		ANXIN 浙江安欣电业有限公司 ZHEJIANG ANXIN ELECTRONICS CO.,LTD.		TITLE: ****mm pitch WTB Connector Housing	
.x: ±0.25	x° : ±3.0°	PRODUCT NAME: 套 管			
.xx: ±0.15	xx° : ±2.0°				
.xxx: ±0.01	xxx° :±1.0°	APPD: Zhang Qin	DATE:19.07.26	PART.NO: 12.19.009	
finish:		CHKD:Yang Qi Jia	DATE:19.07.26	SCALE:N/A	PAGE:1/1
DRAWING NO:		DR: Huang An	DATE:19.07.26	UNITS:mm	REV:A

ROHS

REV	REVISION DESCRIPTION	DATE	APPD

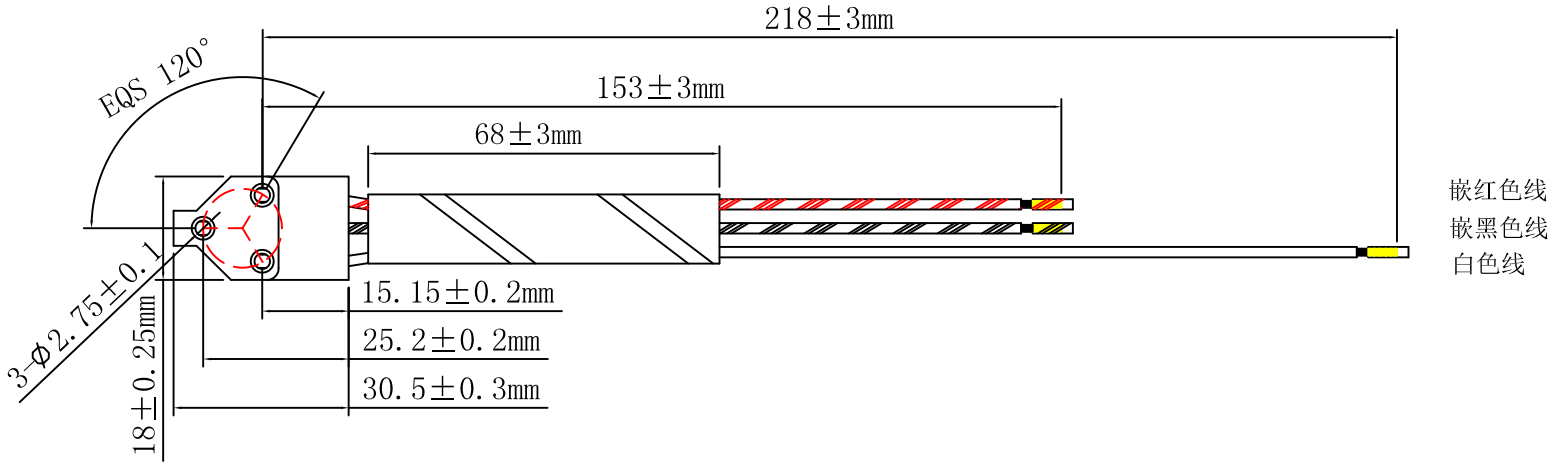

NOTES

Voltage Rated:380V AC.DC.

Current Rated:15A AC.DC.

Contact Resistance:≤40mΩ

Contact Resistance:≥1000mΩ

Dielectric Strength:

≥3KV AC/minute

Material:PBT plastic

Terminal:0.4mm Phosphor bronze

Wire:High temperature braid

Bushing:Polyester woven sleeve

于2020年9月18日作废

GENERAL TOLERANCES (UNLESS SPECIFIED)				浙江安欣电业有限公司 ANXIN ZHEJIANG ANXIN ELECTRONICS CO.,LTD.			
.x: ±0.25	.x° : ±3.0°	PRODUCT NAME: 定频线束组件			TITLE: 11.66mm pitch WTB Connector Housing		
.xx: ±0.15	.xx° : ±2.0°						
.xxx: ±0.01	.xxx° :±1.0°	APPD: Zhang Qin	DATE:19.07.26		PART.NO: 12.19.009		
finish:		CHKD:Yang Qi Jia	DATE:19.07.26		SCALE:N/A	PAGE:1/1	
DRAWING NO:		DR: Huang An	DATE:19.07.26		UNITS:mm	REV:A	

ROHS

REV	REVISION DESCRIPTION	DATE	APPD

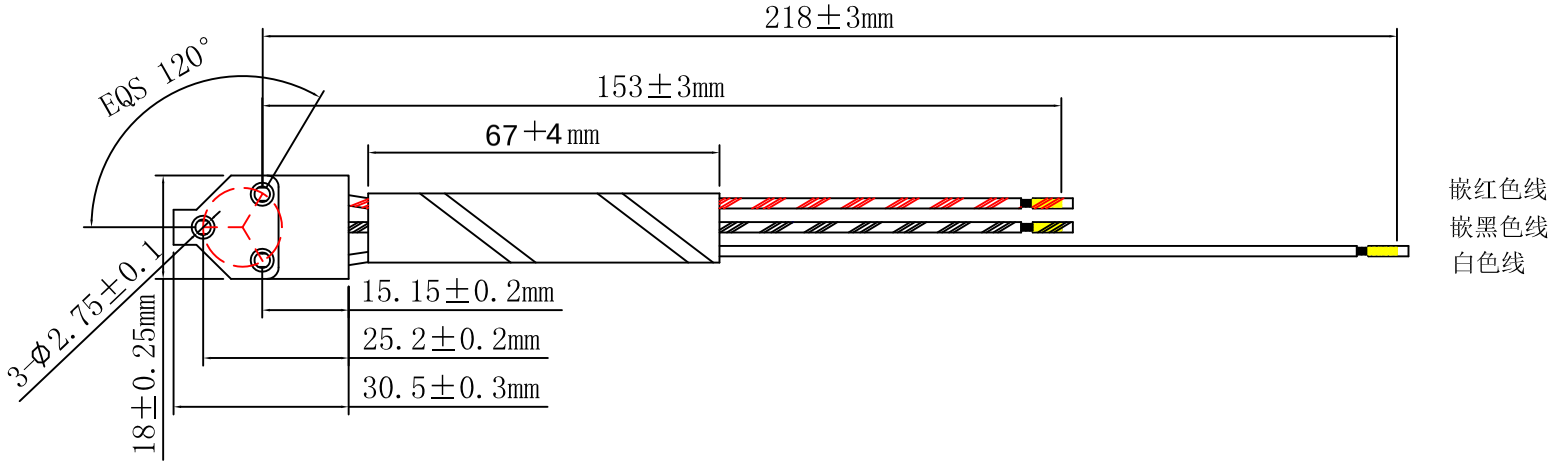

NOTES

Voltage Rated:380V AC.DC.

Current Rated:15A AC.DC.

Contact Resistance:≤40mΩ

Contact Resistance:≥1000mΩ

Dielectric Strength:

≥3KV AC/minute

Material:PBT plastic

Terminal:0.4mm Phosphor bronze

Wire:High temperature braid

Bushing:Polyester woven sleeve

GENERAL TOLERANCES (UNLESS SPECIFIED)					
.x: ±0.25	x° : ±3.0°	浙江安欣电业有限公司 ANXIN ZHEJIANG ANXIN ELECTRONICS CO.,LTD.			
.xx: ±0.15	xx° : ±2.0°	PRODUCT NAME: 定频线束组件		TITLE: 11.66mm pitch WTB Connector Housing	
.xxx: ±0.01	xxx° :±1.0°	APPD: Zhang Qin	DATE:2020.9.18	PART.NO: 12.19.009	
finish:		CHKD:Yang Qi Jia	DATE:2020.9.18	SCALE:N/A	PAGE:1/1
DRAWING NO:		DR: Huang An	DATE:2020.9.18	UNITS:mm	REV:A